For the part number 3849.SMBA.1M10.009 please use the cable stripping on the outline drawing.

M 176	Montageanleitung Assembly Instruction	IMS CONNECTOR SYSTEMS HF-Steckverbinder RF Connectors

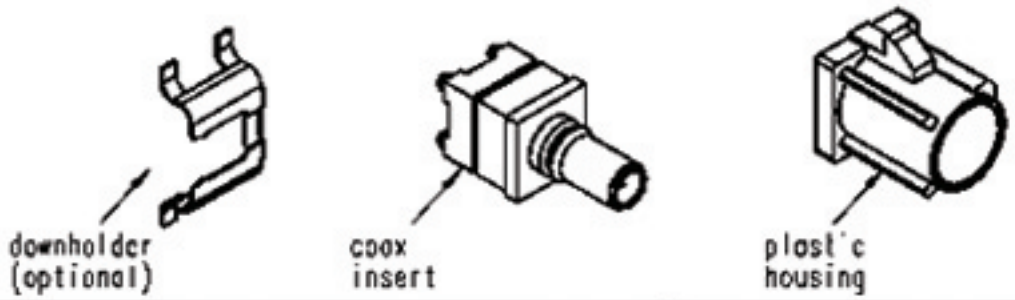

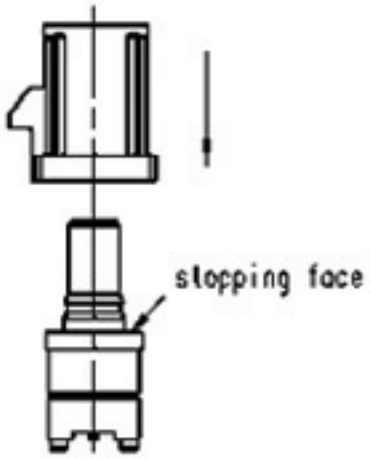

Press the plastic housing on the coax insert. Plastic housing must be pressed on stopping face. Please take care, do not damage the plastic housing or coax insert.

Tool for assembly:
IMS part number ACK-3918

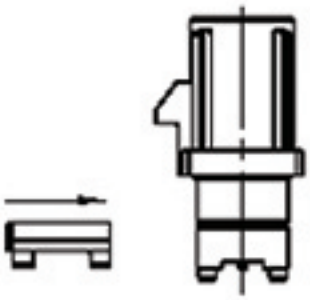

Push the downholder into the nut for the coax insert until you feel a click

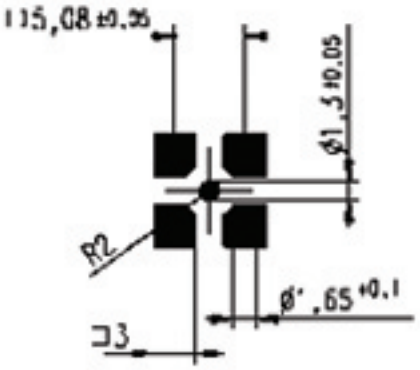

proposal
PCB- cyout and drilling tem cte

IMS Connector Systems GmbH · Obere Hauptstraße 30 · D-79843 Löffingen · Postfach 1141 · D-79840 Löffingen
Tel (+49) 7654-9010 · Fax (+49) 7654-901199 · Net www.imscs.com · E-mail sales@imscs.com