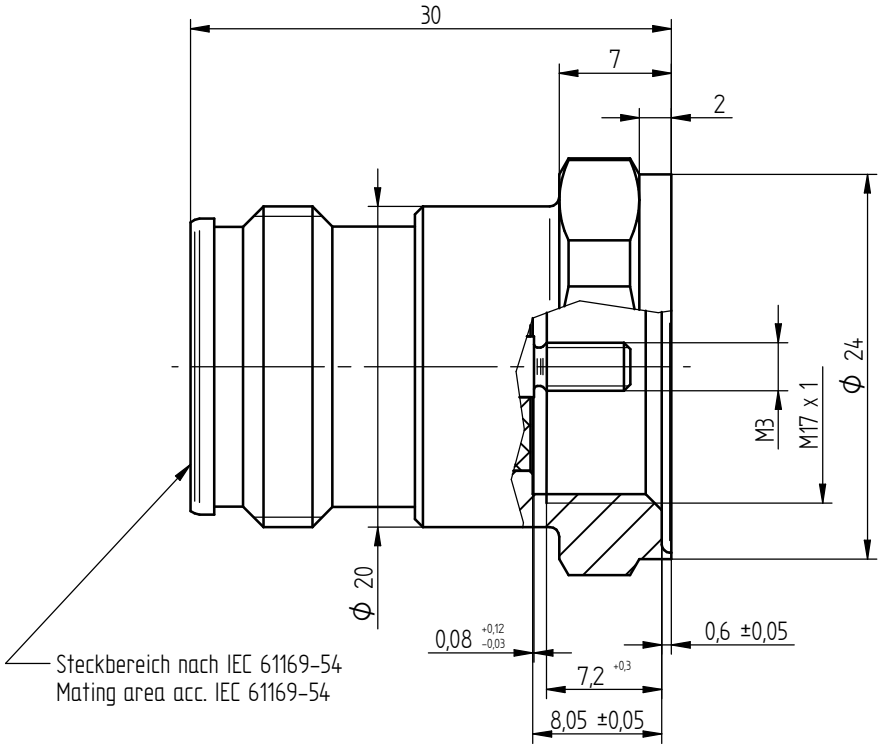

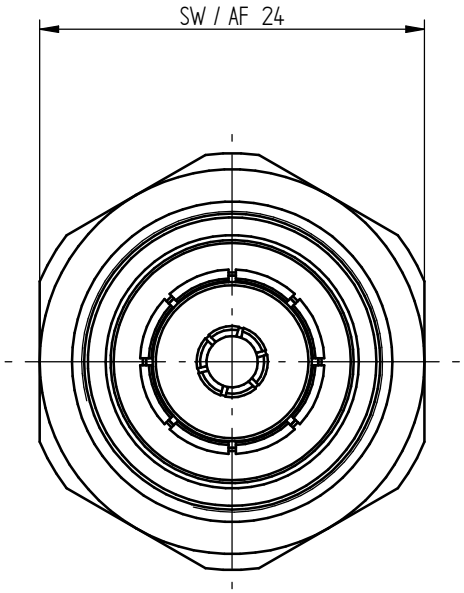

Empfohlene Anschlussdurchmesser /
Recommended connecting diameter

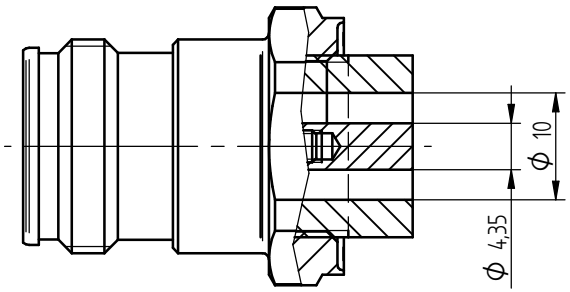

2:1

	IMS CONNECTOR SYSTEMS				general tolerance ISO 2768 mH			scale: 3:1
						date	name	
					generate	05.08.14	Schwaer	4.3/10-Chassisbuchse
					checked			4.3/10-Bulkhead jack
Design	b	M15x1 in M17x1	14.01.15	RSc				5205.VDZ.2010.00' Rev. b
Design	a	add. view	06.10.14	RSc				
nr.	rev.	alteration	date	name				